DEWALT®

XR LI-ION

www.DEWALT.com

DCH481

Copyright DEWALT

Fig. A

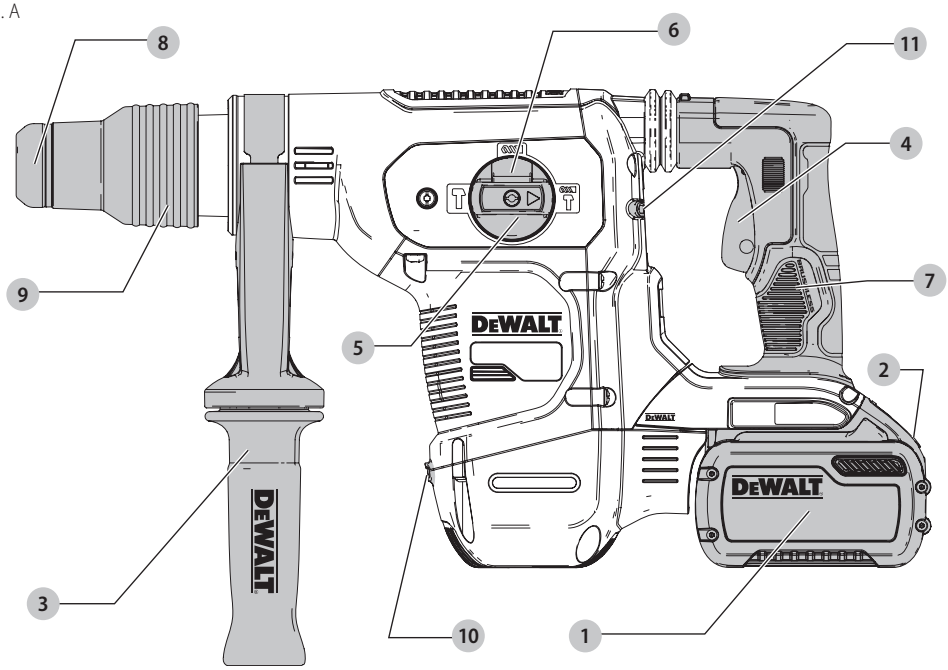

Fig. B

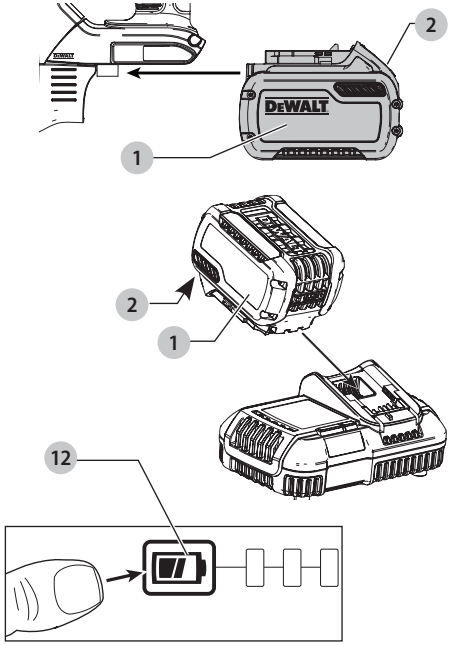

Fig. C

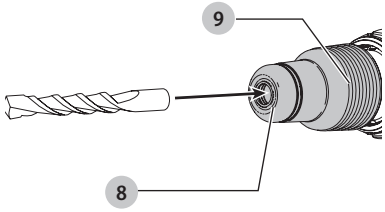

Fig. D

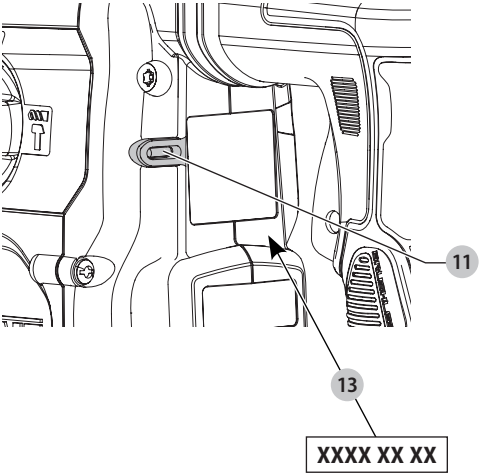

Fig. E

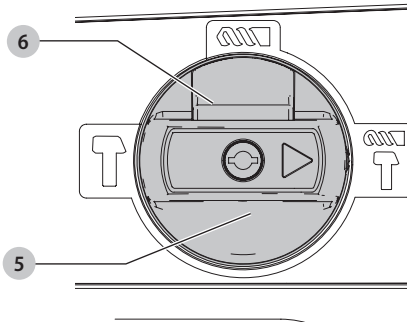

Fig. F

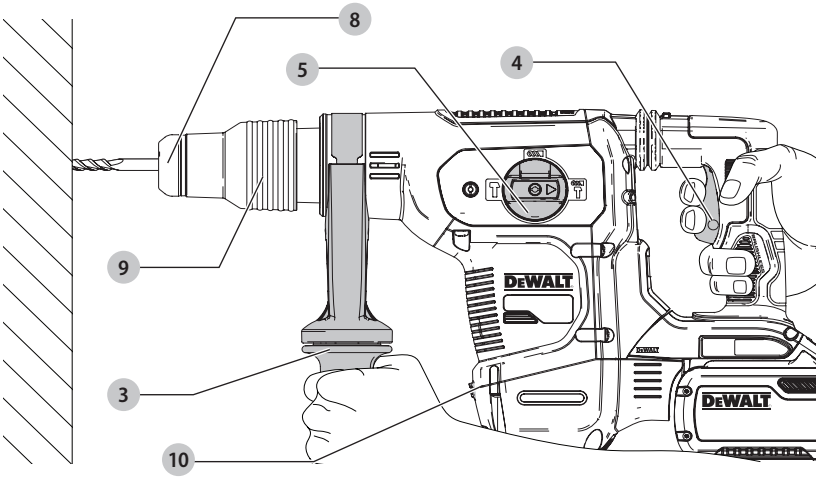

HEAVY-DUTY CORDLESS ROTARY HAMMER DCH481

Congratulations!

You have chosen a DEWALT tool. Years of experience, thorough product development and innovation make DEWALT one of the most reliable partners for professional power tool users.

Technical Data

		DCH481
Voltage	V_{DC}	54
Type		2
No-load speed	min^{-1}	540
No-load impact rate	bpm	3150
Single impact energy (EPTA 05/2009)	J	6.1
Maximum drilling range in concrete	mm	40
Optimum drilling range in concrete	mm	16–30
Maximum core drilling range in concrete	mm	45-100
Tool Holder		SDS-max®
Collar diameter	mm	76
Battery Type		Li-Ion
Weight (without battery pack)	kg	5.4

Noise and vibration total values (triax vector sum) according to EN IEC 62841-2-6:		
L_{PA} (emission sound pressure level)	dB(A)	98
L_{WA} (sound power level)	dB(A)	106
K (uncertainty for the given sound level)	dB(A)	3

Drilling into concrete		
Vibration emission value $a_{h, HD}$ =	m/s^2	9.1
Uncertainty K =	m/s^2	1.5
Chiselling		
Vibration emission value $a_{h,Cheq}$ =	m/s^2	8.1
Uncertainty K =	m/s^2	1.5

The vibration and/or noise emission level given in this information sheet has been measured in accordance with a standardised test given in EN IEC 62841 and may be used to compare one tool with another. It may be used for a preliminary assessment of exposure.

WARNING: *The declared vibration and/or noise emission level represents the main applications of the tool. However, if the tool is used for different applications, with different accessories or is poorly maintained, the vibration and/or noise emission may differ. This may significantly increase the exposure level over the total working period.*

An estimation of the level of exposure to vibration and/or noise should also take into account the times when the tool is switched off or when it is running but not actually doing the job. This may significantly reduce the exposure level over the total working period.

Identify additional safety measures to protect the operator from the effects of vibration and/or noise such as: maintain the tool and the accessories, keep the hands warm (relevant for vibration), organisation of work patterns.

EC-Declaration of Conformity

Machinery Directive

CE

Rotary Hammer DCH481

DEWALT declares that these products described under ***Technical Data*** are in compliance with: 2006/42/EC, EN62841-1:2015 +A11:2022, EN IEC 62841-2-6:2020 +A11:2020.

These products also comply with Directive 2014/30/EU and 2011/65/EU. For more information, please contact DEWALT at the following address or refer to the back of the manual.

The undersigned is responsible for compilation of the technical file and makes this declaration on behalf of DEWALT.

Markus Rompel
Vice-President Engineering, PTE-Europav
DEWALT, Richard-Klinger-Straße 11,
65510, Idstein, Germany
05.06.2024

WARNING: *To reduce the risk of injury, read the instruction manual.*

Definitions: Safety Guidelines

The definitions below describe the level of severity for each signal word. Please read the manual and pay attention to these symbols.

DANGER: *Indicates an imminently hazardous situation which, if not avoided,* ***will*** *result in* ***death or serious injury****.*

WARNING: *Indicates a potentially hazardous situation which, if not avoided,* ***could*** *result in* ***death or serious injury****.*

CAUTION: *Indicates a potentially hazardous situation which, if not avoided,* ***may*** *result in* ***minor or moderate injury****.*

NOTICE: *Indicates a practice* ***not related to personal injury*** *which, if not avoided,* ***may*** *result in* ***property damage****.*

Denotes risk of electric shock.

Denotes risk of fire.

Batteries				Chargers/Charge Times (Minutes)***									
Cat #	V_{DC}	Ah	Weight (kg)	DCB104	DCB107	DCB112/ DCB1102	DCB113	DCB115/ DCB1104	DCB116	DCB117	DCB118	DCB132	DCB119
DCB546	18/54	6.0/2.0	1.08	60	270	170	140	90	80	40	60	90	X
DCB547/G	18/54	9.0/3.0	1.46	75*	420	270	220	135*	110*	60	75*	135*	X
DCB548	18/54	12.0/4.0	1.46	120	540	350	300	180	150	80	120	180	X
DCB549	18/54	15.0/5.0	2.12	125	730	450	380	230	170	90	125	230	X
DCB181	18	1.5	0.35	22	70	45	35	22	22	22	22	22	45
DCB182	18	4.0	0.61	60/40**	185	120	100	60	60/45**	60/40**	60/40**	60	120
DCB183/B/G	18	2.0	0.40	30	90	60	50	30	30	30	30	30	60
DCB184/B/G	18	5.0	0.62	75/50**	240	150	120	75	75/60**	75/50**	75/50**	75	150
DCB185	18	1.3	0.35	22	60	40	30	22	22	22	22	22	40
DCB187	18	3.0	0.54	45	140	90	70	45	45	45	45	45	90
DCB189	18	4.0	0.54	60	185	120	100	60	60	60	60	60	120
DCBP034/G	18	1.7	0.32	27	82	50	40	27	27	27	27	27	50
DCBP518/G	18	5.0	0.75	50	240	150	120	75	60	50	50	75	150

**Date code 201811475B or later.*
***Date code 201536 or later.*
****Battery charge times matrix provided for guidance only; charge times will vary depending on temperature and condition of batteries.*

GENERAL POWER TOOL SAFETY WARNINGS

WARNING: Read all safety warnings, instructions, illustrations and specifications provided with this power tool. *Failure to follow all instructions listed below may result in electric shock, fire and/or serious injury.*

SAVE ALL WARNINGS AND INSTRUCTIONS FOR FUTURE REFERENCE

The term "power tool" in the warnings refers to your mains-operated (corded) power tool or battery-operated (cordless) power tool.

1) Work Area Safety

a) ***Keep work area clean and well lit.*** *Cluttered or dark areas invite accidents.*

b) ***Do not operate power tools in explosive atmospheres, such as in the presence of flammable liquids, gases or dust.*** *Power tools create sparks which may ignite the dust or fumes.*

c) ***Keep children and bystanders away while operating a power tool.*** *Distractions can cause you to lose control.*

2) Electrical Safety

a) ***Power tool plugs must match the outlet. Never modify the plug in any way. Do not use any adapter plugs with earthed (grounded) power tools.*** *Unmodified plugs and matching outlets will reduce risk of electric shock.*

b) ***Avoid body contact with earthed or grounded surfaces, such as pipes, radiators, ranges and refrigerators.*** *There is an increased risk of electric shock if your body is earthed or grounded.*

c) ***Do not expose power tools to rain or wet conditions.*** *Water entering a power tool will increase the risk of electric shock.*

d) ***Do not abuse the cord. Never use the cord for carrying, pulling or unplugging the power tool. Keep cord away from heat, oil, sharp edges or moving parts.*** *Damaged or entangled cords increase the risk of electric shock.*

e) ***When operating a power tool outdoors, use an extension cord suitable for outdoor use.*** *Use of a cord suitable for outdoor use reduces the risk of electric shock.*

f) ***If operating a power tool in a damp location is unavoidable, use a residual current device (RCD) protected supply.*** *Use of an RCD reduces the risk of electric shock.*

3) Personal Safety

a) ***Stay alert, watch what you are doing and use common sense when operating a power tool. Do not use a power tool while you are tired or under the influence of drugs, alcohol or medication.*** *A moment of inattention while operating power tools may result in serious personal injury.*

b) ***Use personal protective equipment. Always wear eye protection.*** *Protective equipment such as a dust mask, non-skid safety shoes, hard hat or hearing protection used for appropriate conditions will reduce personal injuries.*

c) ***Prevent unintentional starting. Ensure the switch is in the off-position before connecting to power source and/or battery pack, picking up or carrying the tool.*** *Carrying power tools with your finger on the switch or energising power tools that have the switch on invites accidents.*

d) ***Remove any adjusting key or wrench before turning the power tool on.*** *A wrench or a key left attached*

to a rotating part of the power tool may result in personal injury.

e) ***Do not overreach. Keep proper footing and balance at all times.*** *This enables better control of the power tool in unexpected situations.*

f) ***Dress properly. Do not wear loose clothing or jewellery. Keep your hair and clothing away from moving parts.*** *Loose clothes, jewellery or long hair can be caught in moving parts.*

g) ***If devices are provided for the connection of dust extraction and collection facilities, ensure these are connected and properly used.*** *Use of dust collection can reduce dust-related hazards.*

h) ***Do not let familiarity gained from frequent use of tools allow you to become complacent and ignore tool safety principles.*** *A careless action can cause severe injury within a fraction of a second.*

4) Power Tool Use and Care

a) ***Do not force the power tool. Use the correct power tool for your application.*** *The correct power tool will do the job better and safer at the rate for which it was designed.*

b) ***Do not use the power tool if the switch does not turn it on and off.*** *Any power tool that cannot be controlled with the switch is dangerous and must be repaired.*

c) ***Disconnect the plug from the power source and/or remove the battery pack, if detachable, from the power tool before making any adjustments, changing accessories, or storing power tools.*** *Such preventive safety measures reduce the risk of starting the power tool accidentally.*

d) ***Store idle power tools out of the reach of children and do not allow persons unfamiliar with the power tool or these instructions to operate the power tool.*** *Power tools are dangerous in the hands of untrained users.*

e) ***Maintain power tools and accessories. Check for misalignment or binding of moving parts, breakage of parts and any other condition that may affect the power tool's operation. If damaged, have the power tool repaired before use.*** *Many accidents are caused by poorly maintained power tools.*

f) ***Keep cutting tools sharp and clean.*** *Properly maintained cutting tools with sharp cutting edges are less likely to bind and are easier to control.*

g) ***Use the power tool, accessories and tool bits etc. in accordance with these instructions, taking into account the working conditions and the work to be performed.*** *Use of the power tool for operations different from those intended could result in a hazardous situation.*

h) ***Keep handles and grasping surfaces dry, clean and free from oil and grease.*** *Slippery handles and grasping surfaces do not allow for safe handling and control of the tool in unexpected situations.*

5) Battery Tool Use and Care

a) ***Recharge only with the charger specified by the manufacturer.*** *A charger that is suitable for one type of battery pack may create a risk of fire when used with another battery pack.*

b) ***Use power tools only with specifically designated battery packs.*** *Use of any other battery packs may create a risk of injury and fire.*

c) ***When battery pack is not in use, keep it away from other metal objects, like paper clips, coins, keys, nails, screws or other small metal objects, that can make a connection from one terminal to another.*** *Shorting the battery terminals together may cause burns or a fire.*

d) ***Under abusive conditions, liquid may be ejected from the battery; avoid contact. If contact accidentally occurs, flush with water. If liquid contacts eyes, additionally seek medical help.*** *Liquid ejected from the battery may cause irritation or burns.*

e) ***Do not use a battery pack or tool that is damaged or modified.*** *Damaged or modified batteries may exhibit unpredictable behaviour resulting in fire, explosion or risk of injury.*

f) ***Do not expose a battery pack or tool to fire or excessive temperature.*** *Exposure to fire or temperature above 130 °C may cause explosion.*

g) ***Follow all charging instructions and do not charge the battery pack or tool outside the temperature range specified in the instructions.*** *Charging improperly or at temperatures outside the specified range may damage the battery and increase the risk of fire.*

6) Service

a) ***Have your power tool serviced by a qualified repair person using only identical replacement parts.*** *This will ensure that the safety of the power tool is maintained.*

b) ***Never service damaged battery packs.*** *Service of battery packs should only be performed by the manufacturer or authorized service providers.*

Residual Risks

The following risks are inherent to the use of rotary hammers:

- *Injuries caused by touching the rotating parts or hot parts of the tool.*

In spite of the application of the relevant safety regulations and the implementation of safety devices, certain residual risks cannot be avoided. These are:

- *Impairment of hearing.*
- *Risk of squeezing fingers when changing the accessory.*
- *Health hazards caused by breathing dust developed when working in concrete and/or masonry.*
- *Risk of personal injury due to flying particles.*
- *Risk of burns due to accessories becoming hot during operation.*
- *Risk of personal injury due to prolonged use.*

Electrical Safety

The electric motor has been designed for one voltage only. Always check that the battery pack voltage corresponds to the

voltage on the rating plate. Also make sure that the voltage of your charger corresponds to that of your mains.

Your DEWALT charger is double insulated in accordance with EN60335; therefore no earth wire is required.

If the supply cord is damaged, it must be replaced by a specially prepared cord available through the DEWALT service organisation.

SAVE THESE INSTRUCTIONS

Hammer Safety Warnings

- ***Wear ear protectors.*** *Exposure to noise can cause hearing loss.*
- ***Use auxiliary handle(s) if supplied with the tool.*** *Loss of control can cause personal injury.*
- ***Hold the power tool by insulated gripping surfaces, when performing an operation where the cutting accessory may contact hidden wiring.*** *Cutting accessory contacting a "live" wire may make exposed metal parts of the power tool "live" and could give the operator an electric shock.*

Safety Instructions When Using Long Drill Bits with Rotary Hammers

- ***Always start drilling at low speed and with the bit tip in contact with the workpiece.*** *At higher speeds, the bit is likely to bend if allowed to rotate freely without contacting the workpiece, resulting in personal injury.*
- ***Apply pressure only in direct line with the bit and do not apply excessive pressure.*** *Bits can bend causing breakage or loss of control, resulting in personal injury.*

Additional Safety Instructions for Rotary Hammer Drills

- ***Use clamps or other practical way to secure and support the workpiece to a stable platform.*** *Holding the work by hand or against your body is unstable and may lead to loss of control.*
- ***Wear safety goggles or other eye protection.*** *Hammering operations cause chips to fly. Flying particles can cause permanent eye damage. Wear a dust mask or respirator for applications that generate dust. Ear protection may be required for most applications.*
- ***Keep a firm grip on the tool at all times.*** *Do not attempt to operate this tool without holding it with both hands. It is recommended that the side handle be used at all times. Operating this tool with one hand will result in loss of control. Breaking through or encountering hard materials such as re-bar may be hazardous as well. Tighten the side handle securely before use.*
- ***Do not operate this tool for long periods of time.*** *Vibration caused by hammer action may be harmful to your hands and arms. Use gloves to provide extra cushion and limit exposure by taking frequent rest periods.*
- ***Do not recondition bits yourself.*** *Bit reconditioning should be done by a qualified specialist. Improperly reconditioned bits could cause injury. Only slightly-worn chisels can be resharpened by grinding.*
- ***Do not overheat the bit (discoloration) while grinding a new edge.*** *Badly worn chisels require reforging. Do not reharden and temper the chisel.*
- ***Wear gloves when operating tool or changing bits.*** *Accessible metal parts on the tool and bits may get extremely hot during operation. Small bits of broken material may damage bare hands.*
- ***Never lay the tool down until the bit has come to a complete stop.*** *Moving bits could cause injury.*
- ***Do not strike jammed bits with a hammer to dislodge them.*** *Fragments of metal or material chips could dislodge and cause injury.*
- ***Be certain that the material being drilled does not conceal electric or gas service and that their locations have been verified with the utility companies.***
- ***When working above the floor, make sure that the area below is clear****. Falling parts can cause injuries to bystanders.*

Reducing Dust Exposure

Before starting work, check the hazard class of the dust that will be produced when working.

WARNING: *Avoid touching or breathing dust as it can be harmful to health. Dust created when using a power tool and when conducting other construction activities can contain chemicals, minerals, or particles known to cause respiratory infections, allergic reactions, cancer, birth defects, or other reproductive harm of the user or bystanders.*

- *Such dust can be generated, for example, when working on hardwoods such as beech or oak, lead-based paint, concrete, masonry, or stones containing quartz.*
- *Material containing asbestos may be handled only by specialists.*
- *Observe the relevant regulations in your country for the materials to be worked on.*
- *Use a dust extractor or extraction system with an officially approved protection class in compliance with the locally applicable dust protection regulations and suitable for the material to be worked on.*
- *Capture the resulting dust particles directly at the source and avoid deposits in the surrounding area. Use suitable extraction accessories for this purpose.*

Additional measures:

- *Make sure that the workplace is well ventilated.*
- *Wear a respirator appropriate for the type of dust generated.*

Chargers

DEWALT chargers require no adjustment and are designed to be as easy as possible to operate.

Important Safety Instructions for All Battery Chargers

SAVE THESE INSTRUCTIONS: This manual contains important safety and operating instructions for compatible battery chargers (refer to ***Technical Data***).

- *Before using charger, read all instructions and cautionary markings on charger, battery pack, and product using battery pack.*

WARNING: *Shock hazard. Do not allow any liquid to get inside charger. Electric shock may result.*

WARNING: *We recommend the use of a residual current device with a residual current rating of 30mA or less.*

CAUTION: *Burn hazard. To reduce the risk of injury, charge only DEWALT rechargeable batteries. Other types of batteries may burst causing personal injury and damage.*

CAUTION: *Children should be supervised to ensure that they do not play with the appliance.*

NOTICE: *Under certain conditions, with the charger plugged into the power supply, the exposed charging contacts inside the charger can be shorted by foreign material. Foreign materials of a conductive nature such as, but not limited to, steel wool, aluminum foil or any buildup of metallic particles should be kept away from charger cavities. Always unplug the charger from the power supply when there is no battery pack in the cavity. Unplug charger before attempting to clean*

- ***DO NOT attempt to charge the battery pack with any chargers other than the ones in this manual.*** *The charger and battery pack are specifically designed to work together.*
- ***These chargers are not intended for any uses other than charging DEWALT rechargeable batteries.*** *Any other uses may result in risk of fire, electric shock or electrocution.*
- ***Do not expose charger to rain or snow.***
- ***Pull by plug rather than cord when disconnecting charger.*** *This will reduce risk of damage to electric plug and cord.*
- ***Make sure that cord is located so that it will not be stepped on, tripped over, or otherwise subjected to damage or stress.***
- ***Do not use an extension cord unless it is absolutely necessary.*** *Use of improper extension cord could result in risk of fire, electric shock, or electrocution.*
- ***Do not place any object on top of charger or place the charger on a soft surface that might block the ventilation slots and result in excessive internal heat.*** *Place the charger in a position away from any heat source. The charger is ventilated through slots in the top and the bottom of the housing.*
- ***Do not operate charger with damaged cord or plug—*** *have them replaced immediately.*
- ***Do not operate charger if it has received a sharp blow, been dropped, or otherwise damaged in any way.*** *Take it to an authorised service centre.*
- ***Do not disassemble charger; take it to an authorised service centre when service or repair is required.*** *Incorrect reassembly may result in a risk of electric shock, electrocution or fire.*
- *In case of damaged power supply cord the supply cord must be replaced immediately by the manufacturer, its service agent or similar qualified person to prevent any hazard.*
- ***Disconnect the charger from the outlet before attempting any cleaning. This will reduce the risk of electric shock.*** *Removing the battery pack will not reduce this risk.*
- ***NEVER*** *attempt to connect two chargers together.*
- ***The charger is designed to operate on standard 230V household electrical power. Do not attempt to use it on any other voltage.*** *This does not apply to the vehicular charger.*

Using an Extension Cable

An extension cord should not be used unless absolutely necessary. Use an approved extension cable suitable for the power input of your charger (see ***Technical Data***). The minimum conductor size is 1 mm^2; the maximum length is 30 m.

When using a cable reel, always unwind the cable completely.

Charging a Battery (Fig. B)

1. Plug the charger into an appropriate outlet before inserting battery pack.
2. Insert the battery pack ❶ into the charger, making sure the battery pack is fully seated in the charger. The red (charging) light will blink repeatedly indicating that the charging process has started.
3. The completion of charge will be indicated by the red light remaining ON continuously. The battery pack is fully charged and may be used at this time or left in the charger. To remove the battery pack from the charger, push the battery release button ❷ on the battery pack.

NOTE: To ensure maximum performance and life of lithium-ion battery packs, charge the battery pack fully before first use.

Charger Operation

Refer to the indicators below for the charge status of the battery pack.

Charge Indicators	
Charging	
Fully Charged	
Hot/Cold Pack Delay*	

*****The red light will continue to blink, but a yellow indicator light will be illuminated during this operation. Once the battery pack has reached an appropriate temperature, the yellow light will turn off and the charger will resume the charging procedure.

The compatible charger(s) will not charge a faulty battery pack. The charger will indicate faulty battery by refusing to light or by displaying problem pack or charger blink pattern.

NOTE: This could also mean a problem with a charger.

If the charger indicates a problem, take the charger and battery pack to be tested at an authorised service centre.

Hot/Cold Pack Delay

When the charger detects a battery pack that is too hot or too cold, it automatically starts a Hot/Cold Pack Delay, suspending charging until the battery pack has reached an appropriate temperature. The charger then automatically switches to the pack charging mode. This feature ensures maximum battery pack life.

A cold battery pack will charge at a slower rate than a warm battery pack. The battery pack will charge at that slower rate throughout the entire charging cycle and will not return to maximum charge rate even if the battery pack warms.

The DCB118 charger is equipped with an internal fan designed to cool the battery pack. The fan will turn on automatically when the battery pack needs to be cooled. Never operate the charger if the fan does not operate properly or if ventilation slots are blocked. Do not permit foreign objects to enter the interior of the charger.

Electronic Protection System

XR Li-Ion tools are designed with an Electronic Protection System that will protect the battery pack against overloading, overheating or deep discharge.

The tool will automatically turn off if the Electronic Protection System engages. If this occurs, place the lithium-ion battery pack on the charger until it is fully charged.

Wall Mounting

These chargers are designed to be wall mountable or to sit upright on a table or work surface. If wall mounting, locate the charger within reach of an electrical outlet, and away from a corner or other obstructions which may impede air flow. Use the back of the charger as a template for the location of the mounting screws on the wall. Mount the charger securely using drywall screws (purchased separately) at least 25.4 mm long with a screw head diameter of 7–9 mm, screwed into wood to an optimal depth leaving approximately 5.5 mm of the screw exposed. Align the slots on the back of the charger with the exposed screws and fully engage them in the slots.

Charger Cleaning Instructions

WARNING: Shock hazard. Disconnect the charger from the AC outlet before cleaning*. Dirt and grease may be removed from the exterior of the charger using a cloth or soft non-metallic brush. Do not use water or any cleaning solutions. Never let any liquid get inside the tool; never immerse any part of the tool into a liquid.*

Battery Packs

Important Safety Instructions for All Battery Packs

When ordering replacement battery packs, be sure to include catalogue number and voltage.

The battery pack is not fully charged out of the carton. Before using the battery pack and charger, read the safety instructions below. Then follow charging procedures outlined.

READ ALL INSTRUCTIONS

- ***Do not charge or use battery in explosive atmospheres, such as in the presence of flammable liquids, gases or dust.*** *Inserting or removing the battery from the charger may ignite the dust or fumes.*
- ***Never force battery pack into charger. Do not modify battery pack in any way to fit into a non-compatible charger as battery pack may rupture, causing serious personal injury.***
- *Charge the battery packs only in DEWALT chargers.*
- ***DO NOT*** *splash or immerse in water or other liquids.*
- ***Do not store or use the tool and battery pack in locations where the temperature may fall below 4 ˚C (39.2 ˚F) (such as outside sheds or metal buildings in winter), or reach or exceed 40 ˚C (104 ˚F) (such as outside sheds or metal buildings in summer).***
- ***Do not incinerate the battery pack even if it is severely damaged or is completely worn out.*** *The battery pack can explode in a fire. Toxic fumes and materials are created when lithium-ion battery packs are burned.*
- ***If battery contents come into contact with the skin, immediately wash area with mild soap and water.*** *If battery liquid gets into the eye, rinse water over the open eye for 15 minutes or until irritation ceases. If medical attention is needed, the battery electrolyte is composed of a mixture of liquid organic carbonates and lithium salts.*
- ***Contents of opened battery cells may cause respiratory irritation.*** *Provide fresh air. If symptoms persist, seek medical attention.*

WARNING: *Burn hazard. Battery liquid may be flammable if exposed to spark or flame.*

WARNING: *Never attempt to open the battery pack for any reason. If battery pack case is cracked or damaged, do not insert into charger. Do not crush, drop or damage battery pack. Do not use a battery pack or charger that has received a sharp blow, been dropped, run over or damaged in any way (i.e., pierced with a nail, hit with a hammer, stepped on). Electric shock or electrocution may result. Damaged battery packs should be returned to service centre for recycling.*

WARNING: Fire hazard. Do not store or carry the battery pack so that metal objects can contact exposed battery terminals. *For example, do not place the battery pack in aprons, pockets, tool boxes, product kit boxes, drawers, etc., with loose nails, screws, keys, etc.*

CAUTION: When not in use, place tool on its side on a stable surface where it will not cause a tripping or falling hazard. *Some tools with large battery packs will stand upright on the battery pack but may be easily knocked over.*

Transportation

WARNING: Fire hazard. *Transporting batteries can possibly cause fire if the battery terminals inadvertently come into contact with conductive materials. When transporting batteries, make sure that the battery*

terminals are protected and well-insulated from materials that could contact them and cause a short circuit.
NOTE: *Lithium-ion batteries should not be put in checked baggage.*

DEWALT batteries comply with all applicable shipping regulations as prescribed by industry and legal standards, which include UN Recommendations on the Transport of Dangerous Goods; International Air Transport Association (IATA) Dangerous Goods Regulations; International Maritime Dangerous Goods (IMDG) Regulations; and the European Agreement Concerning The International Carriage of Dangerous Goods by Road (ADR). Lithium-ion cells and batteries have been tested to section 38.3 of the UN Recommendations on the Transport of Dangerous Goods Manual of Tests and Criteria.

In most instances, shipping a DEWALT battery pack will be excepted from being classified as a fully regulated Class 9 Hazardous Material. In general, only shipments containing a lithium-ion battery with an energy rating greater than 100 Watt Hours (Wh) will require being shipped as fully regula WALT does not recommend air shipping lithium-ion battery packs alone regardless of Wh rating. Shipments of tools with batteries (combo kits) can be air shipped as excepted if the Wh rating of the battery pack is no greater than 100 Wh.

Regardless of whether a shipment is considered excepted or fully regulated, it is the shipper's responsibility to consult the latest regulations for packaging, labeling/marking and documentation requirements.

The information provided in this section of the manual is provided in good faith and believed to be accurate at the time the document was created. However, no warranty, expressed or implied, is given. It is the buyer's responsibility to ensure that its activities comply with the applicable regulations.

Transporting the FLEXVOLT® Battery

The DEWALT FLEXVOLT® battery has two modes: **Use** and **Transport**.

Use Mode: When the FLEXVOLT® battery stands alone or is in a DEWALT 18V product, it will operate as an 18V battery. When the FLEXVOLT® battery is in a 54V or a 108V (two 54V batteries) product, it will operate as a 54V battery.

Transport Mode: When the cap is attached to the FLEXVOLT™ battery, the battery is in Transport mode. Keep the cap for shipping.

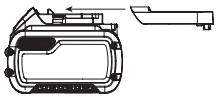

When in Transport mode, strings of cells are electrically disconnected within the pack, resulting in 3 batteries with a lower Watt hour (Wh) rating as compared to 1 battery with a higher Watt hour rating. This increased quantity of 3 batteries with the lower Watt hour rating can exempt the pack from certain shipping regulations that are imposed upon the higher Watt hour batteries.

For example, the Transport Wh rating might indicate 3 x 36 Wh, meaning 3 batteries of 36 Wh each. The Use Wh rating might indicate 108 Wh (1 battery implied).

Example of Use and Transport Label Marking

Storage Recommendations

1. The best storage place is one that is cool and dry away from direct sunlight and excess heat or cold. For optimum battery performance and life, store battery packs at room temperature when not in use.
2. For long storage, it is recommended to store a fully charged battery pack in a cool, dry place out of the charger for optimal results.

NOTE: Battery packs should not be stored completely depleted of charge. The battery pack will need to be recharged before use.

Labels on Charger and Battery Pack

In addition to the pictographs used in this manual, the labels on the charger and the battery pack may show the following pictographs:

Read instruction manual before use.

See ***Technical Data*** for charging time.

Do not probe with conductive objects.

Do not charge damaged battery packs.

Do not expose to water.

Have defective cords replaced immediately.

Charge only between 4 °C and 40 °C.

Only for indoor use.

Discard the battery pack with due care for the environment.

Charge DEWALT battery packs only with designated DEWALT chargers. Charging battery packs other than the designated DEWALT batteries with a DEWALT charger may make them burst or lead to other dangerous situations.

Do not incinerate the battery pack.

USE (without transport cap). Example: Wh rating indicates 108 Wh (1 battery with 108 Wh).

TRANSPORT (with built-in transport cap). Example: Wh rating indicates 3 x 36 Wh (3 batteries of 36 Wh).

Battery Type

The DCH481 operates on a 54-volt battery pack.

These battery packs may be used: DCB546, DCB547, DCB548, DCB549. Refer to ***Technical Data*** for more information.

Markings on Tool

The following pictograms are shown on the tool:

Read instruction manual before use.

Wear ear protection.

Wear eye protection.

Visible radiation. Do not stare into light.

Date Code Position (Fig. D)

The production date code 13 consists of a 4-digit year followed by a 2-digit week and is extended by a 2-digit factory code.

Description (Fig. A)

WARNING: *Never modify the power tool or any part of it. Damage or personal injury could result.*

1. Battery pack
2. Battery release button
3. Side handle
4. Trigger switch
5. Mode selector dial
6. Mode selector release button
7. Main handle
8. Bit holder
9. Sleeve
10. Worklight
11. Anti-rotation indicator

Intended Use

Your cordless rotary hammer has been designed for professional drilling and hammerdrilling applications, as well as chipping applications.

DO NOT use under wet conditions or in the presence of flammable liquids or gases.

Your cordless rotary hammer is a professional power tool.

DO NOT let children come into contact with the tool. Supervision is required when inexperienced operators use this tool.

- **Young children and the infirm.** This appliance is not intended for use by young children or infirm persons without supervision.
- This product is not intended for use by persons (including children) suffering from diminished physical, sensory or mental abilities; lack of experience, knowledge or skills unless they are supervised by a person responsible for their safety. Children should never be left alone with this product.

Overload Clutch

In case of jamming of a drill bit, the drive to the drill spindle is interrupted. Because of the resulting forces, always hold the tool with both hands and take a firm stance. After the overload, release and depress the trigger to re-engage drive.

Mechanical Clutch

These tools are fitted with a mechanical clutch. The indication that the clutch has activated will be an audible ratcheting together with increased vibration.

Anti-Rotation System (Fig. D)

In addition to the clutch, an anti-rotation system offers increased user comfort and safety through an on-board, anti-rotation technology capable of detecting if the user loses control of the hammer. When a jam is detected, the torque and speed are reduced instantly. This feature prevents self rotation of the tool reducing the occurrence of wrist injuries.

The anti-rotation system indicator 11 will illuminate to indicate status.

Indicator	Diagnosis	Solution
OFF	Tool is functioning normally	Follow all warnings and instructions when operating the tool.
SOLID	Anti-Rotation System has been activated (ENGAGED)	With the tool properly supported, release trigger. The tool will function normally when the trigger is depressed again and the indicator light will go out.

Active Vibration Control

For best vibration control, hold the tool as described in ***Proper Hand Position.***

The active vibration control neutralises rebound vibration from the hammer mechanism. Lowering hand and arm vibration, it allows more comfortable use for longer periods of time and extends the life of the unit.

The hammer only needs enough pressure to engage the active vibration control. Applying too much pressure will not make the tool drill or chip faster and active vibration control will not engage.

ASSEMBLY AND ADJUSTMENTS

WARNING: To reduce the risk of serious personal injury, turn tool off and disconnect battery pack before making any adjustments or removing/ installing attachments or accessories. *An accidental start-up can cause injury.*

WARNING: *Use only DEWALT battery packs and chargers.*

Inserting and Removing the Battery Pack from the Tool (Fig. B)

NOTE: Make sure your battery pack 1 is fully charged.

To Install the Battery Pack into the Tool Handle

1. Align the battery pack 1 with the rails inside the tool's handle (Fig. B).
2. Slide it into the handle until the battery pack is firmly seated in the tool and ensure that you hear the lock snap into place.

To Remove the Battery Pack from the Tool

1. Press the release button 2 and firmly pull the battery pack out of the tool handle.
2. Insert battery pack into the charger as described in the charger section of this manual.

Fuel Gauge Battery Packs

Some DEWALT battery packs include a fuel gauge which consists of three green LED lights that indicate the level of charge remaining in the battery pack.

To actuate the fuel gauge, press and hold the fuel gauge button 12. A combination of the three green LED lights will illuminate designating the level of charge left. When the level of charge in the battery is below the usable limit, the fuel gauge will not illuminate and the battery will need to be recharged.

NOTE: The fuel gauge is only an indication of the charge left on the battery pack. It does not indicate tool functionality and is subject to variation based on product components, temperature and end-user application.

Side Handle (Fig. A)

WARNING: *To reduce the risk of personal injury,* ***ALWAYS*** *operate the tool with the side handle properly installed. Failure to do so may result in the side handle slipping during tool operation and subsequent loss of control. Hold tool with both hands to maximize control.*

The side handle 3 clamps to the front of the gear case and may be rotated 360˚ to permit right- or left-hand use. The side handle must be tightened sufficiently to resist the twisting action of the tool if the accessory binds or stalls. Be sure to grip the side handle at the far end to control the tool during a stall.

To loosen side handle, rotate counterclockwise.

Bit and Bit Holder

WARNING: *Burn Hazard.* ***ALWAYS*** *wear gloves when changing bits. Accessible metal parts on the tool and bits may get extremely hot during operation. Small bits of broken material may damage bare hands.*

The hammerdrill can be fitted with different bits depending on the desired application. **Use sharp drill bits only.**

SDS-max® Bit Holder (Fig. C)

To insert a drill bit or other accessory:

1. Insert the shank of the bit about 19 mm into SDS-max® bit holder 8.
2. Push and rotate bit until it locks in place. The bit will be securely held.
3. To release bit, pull the sleeve 9 back and remove the bit.

SDS plus® and SDS max® are registered trademarks of Robert Bosch GmbH.

OPERATION

Instructions for Use

WARNING: *Always observe the safety instructions and applicable regulations.*

WARNING: To reduce the risk of serious personal injury, turn tool off and disconnect battery pack before making any adjustments or removing/ installing attachments or accessories. *An accidental start-up can cause injury.*

Proper Hand Position (Fig. F)

WARNING: *To reduce the risk of serious personal injury,* ***ALWAYS*** *use proper hand position as shown.*

WARNING: *To reduce the risk of serious personal injury,* ***ALWAYS*** *hold securely in anticipation of a sudden reaction.*

Proper hand position requires one hand on the side handle, with the other hand on the main handle. Hold tool firmly with both hands to control the twisting action of the drill.

Operation Modes (Fig. A, E)

WARNING: *Do not select the operating mode when the tool is running.*

Your tool is equipped with a mode selector dial 5 to select the mode appropriate to desired operation.

Symbol	Mode	Application
	Rotary Drilling	Dry diamond coring
	Rotary Hammering	Drilling into concrete and masonry
	Hammering Only	Light chipping

To select an operating mode:

1. Depress the mode selector release button 6.
2. Rotate the mode selector dial so that the arrow points to the symbol corresponding with the desired mode.

NOTE: The mode selector dial 5 must be in rotary drilling, rotary hammering or hammering-only mode at all times. There are no operable positions in between. It may be necessary to briefly run the motor after having changed from 'hammering-only' to 'rotary' modes in order to align the gears.

Performing an Application (Fig. A, F)

WARNING: TO REDUCE THE RISK OF PERSONAL INJURY, ALWAYS *ensure workpiece is anchored or clamped firmly. If drilling thin material, use a wood "back-up" block to prevent damage to the material.*

WARNING: *Always wait until the motor has come to a complete standstill before changing the direction of rotation.*

1. Choose and install the appropriate chuck, adapter, and/or bit onto the tool. Refer to ***Bit and Bit Holder***.
2. Using the mode selector dial 5, select the mode appropriate to desired application. Refer to ***Operation Modes***.
3. Adjust the side handle 3 as required.
4. Place the bit/chisel on the desired location.

5. Depress the trigger switch 4.
   NOTE: Depending on your tool, depressing the trigger switch activates a worklight 10 designed to illuminate the immediate work surface. The worklight will automatically turn off 20 seconds after the trigger switch is released.

Recommendations for Tool Operation

- When drilling, always apply pressure in a straight line with the bit, but do not push hard enough to stall the motor or deflect the bit. A smooth even flow of material indicates the proper drilling rate.
- Your hammer can be used for dry diamond drilling into masonry up to 100 mm. For diamond drilling above this diameter in masonry and regular large diameter diamond drilling in masonry and concrete, we advise the use of a dedicated diamond core drill. Follow the core bit or manufacturer's recommendations for using the accessory.
  NOTE: Always use core bits with integral centre drill systems and ensure the RPM (speed) of the hammer does not exceed the maximum rated RPM of the diamond core.
  - Insert the centre drill into its holder in the centre of the core bit.
  - Remove and unplug the machine.
  - Remove the centre drill from its holder.
  - Plug the machine in and insert the core bit into the workpiece.

WARNING:
- *Do not use this tool to mix or pump easily combustible or explosive fluids (benzine, alcohol, etc.).*
- *Do not mix or stir inflammable liquids labelled accordingly.*

MAINTENANCE

Your DEWALT power tool has been designed to operate over a long period of time with a minimum of maintenance. Continuous satisfactory operation depends upon proper tool care and regular cleaning.

WARNING: To reduce the risk of serious personal injury, turn tool off and disconnect battery pack before making any adjustments or removing/ installing attachments or accessories. *An accidental start-up can cause injury.*

The charger and battery pack are not serviceable.

Lubrication

Your power tool requires no additional lubrication.

Cleaning

WARNING: *Electrical shock and mechanical hazard. Disconnect the electrical appliance from the power source before cleaning.*

WARNING: *To ensure safe and efficient operation, always keep the electrical appliance and the ventilation slots clean.*

WARNING: *Never use solvents or other harsh chemicals for cleaning the non-metallic parts of the tool. These chemicals may weaken the materials used in these parts. Use a cloth dampened only with water and mild soap. Never let any liquid get inside the tool; never immerse any part of the tool into a liquid.*

Ventilation slots can be cleaned using a dry, soft non-metallic brush and/or a suitable vacuum cleaner. Do not use water or any cleaning solutions. Wear approved eye protection and an approved dust mask.

Optional Accessories

WARNING: *Since accessories, other than those offered by DEWALT, have not been tested with this product, use of such accessories with this tool could be hazardous. To reduce the risk of injury, only DEWALT recommended accessories should be used with this product.*

Various types of SDS-max® drill bits and chisels are available as an option. Accessories and attachments used must be regularly lubricated around the SDS-max® fitment.

Consult your dealer for further information on the compatibility of appropriate accessories.

Protecting the Environment

Separate collection. Products and batteries marked with this symbol must not be disposed of with normal household waste.

Products and batteries contain materials that can be recovered or recycled reducing the demand for raw materials. Please recycle electrical products and batteries according to local provisions. Further information is available at **www.2helpU.com**.

Rechargeable Battery Pack

This long-life battery pack must be recharged when it fails to produce sufficient power on jobs which were easily done before. At the end of its technical life, discard it with due care for our environment:

- Run the battery pack down completely, then remove it from the tool.
- Li-Ion cells are recyclable. Take them to your dealer or a local recycling station. The collected battery packs will be recycled or disposed of properly.

Australia / New Zealand	Tel: Aust Tel: NZ	1800 338 002 0800 339 258	www.dewalt.com.au www.dewalt.co.nz support@dewalt.au support@dewalt.co.nz
Belgique et Luxembourg België en Luxemburg	Tel: NL Tel: FR	32 15 47 37 63 32 15 47 37 64	www.dewalt.be support@dewalt.be support@dewalt.be.fr
Danmark	Tel:	70 20 15 10	www.dewalt.dk support@dewalt.dk
Deutschland	Tel:	06126-21-0	www.dewalt.de support@dewalt.de
Ελλάς	Τηλ:	00302108981616	www.dewalt.gr support@dewalt.gr
España	Tel:	934 797 400	www.dewalt.es support@dewalt.es
France	Tel:	04 72 20 39 20	www.dewalt.fr support@dewalt.fr
Schweiz, Suisse, Svizzera	Tel:	044 - 755 60 70	www.dewalt.ch support@dewalt.ch.de support@dewalt.ch.fr support@dewalt.ch.it
Ireland	Tel:	00353-2781800	www.dewalt.ie support@dewalt.ie
Italia	Tel:	800-014353 39 039-9590200	www.dewalt.it support@dewalt.it
Nederlands	Tel:	31 164 283 063	www.dewalt.nl support@dewalt.nl
Norge	Tel:	45 25 13 00	www.dewalt.no support@dewalt.no
Österreich	Tel:	01 - 66116 - 0	www.dewalt.at support@dewalt.at
Portugal	Tel:	+351 214667500	www.dewalt.pt support@dewalt.pt
Suomi	Puh:	010 400 4333	www.dewalt.fi support@dewalt.fi
Sverige	Tel:	031 68 61 60	www.dewalt.se support@dewalt.se
Türkiye	Tel:	+90 216 665 2900	tr.dewalt.global support@dewalt.com.tr
United Kingdom	Tel:	(+44) (0)1753 260094	www.dewalt.co.uk support@dewalt.co.uk
Middle East Africa	Tel:	971 4 812 7400	www.dewalt.ae support@dewalt.ae